P10+

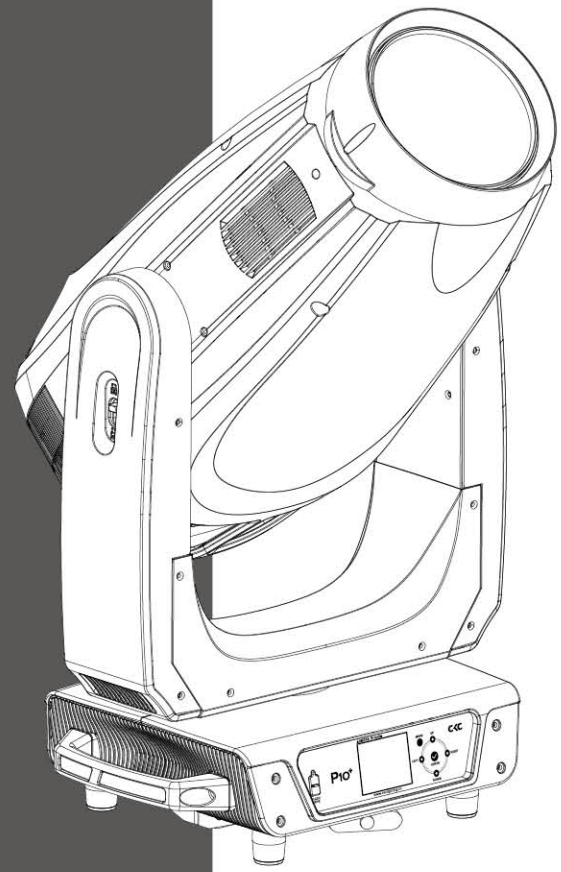

www.ckclighting.com

Before carrying out any installation, maintenance, or cleaning of the lighting fixtures, please confirm that the power has been cut off! Before using this fixture, please read this manual. Our company reserves the right to change product design and specifications without prior notice.

CKC LIGHTING CO.,LTD

Addr.:335 Nansha Avenue, Tung Chung Town,
Nansha District, Guangzhou City, China.
TEL：(020)3920 4506 FAX：(020)3920 4631
WEB：www.ckclighting.com

CONTENTS

1. Security Warning Information 1

2. Product Introduction 3

2.1 Exterior dimensions 3
2.2 Fixture packaging accessories 3

3. Main technical parameters of the equipment 3

4. Packaging and transportation 12

4.1 Disassemble packaging 12
4.2 Equipment installation 12

5. Installation Requirements Explanation 12

5.1 Clamp installation 12
5.2 Fixture installtion 14
5.3 Hanging Installation Diagram 14

6. Power and signal connection 14

6.1 Power and signal socket 14
6.2 Power Connect 15
6.3 Signal Connect 15

7. Control panel 16

7.1 Panel Introduction 16
7.2 System menu 17

8. DMX control channel table 19

9. Control circuit diagram 25

10. Regular maintenance 26

10.1 Cleaning and maintenance 26
10.2 Fault analysis and handling 26

★ Statement ★

- This manual contains important information on safe use and installation. Please read it carefully and follow the requirements for operation and installation. Please keep this manual properly;
- The equipment has good performance and complete packaging when it leaves the factory. The operator should strictly follow the warning items and operating instructions stated in the manual. Any malfunction or damage caused by misuse or neglect of the manual is not within the scope of our company's responsibility and warranty;
- The relevant information in this manual is for reference only. All lighting products are subject to the actual product. Any changes will not be notified separately, and our company reserves the right of final interpretation.

1. Security Warning Information

Attention !

Please read the safety requirements information in this section carefully before installing, powering on, operating, or repairing the lighting fixtures.

- This product is for professional use and is not suitable for other purposes;
- After receiving the lighting fixtures, please check if the packaging is complete and unpack to check if the equipment has been damaged due to transportation. If there is any damage caused by transportation, please do not use this lamp and contact local technicians or manufacturers as soon as possible;
- When transporting again, please use the original packaging materials;
- If there is obvious damage to the machine casing, it should be replaced in a timely manner;
- When hanging lamps, it is necessary to verify that the hanging equipment can withstand more than 6 times the weight of the lamp. After installation, it is necessary to verify that the lamp cover and installation buckle are secure and undamaged. At the same time, a safety rope should be used as an auxiliary safety for the lamp and fixed on the truss;
- The light source inside this luminaire should be replaced by the manufacturer, its service agent, or a similarly qualified person;
- If you have any other questions about how to safely operate the equipment, please contact our technical personnel or call our service hotline;
- This product has a protection level of IP30 and can be used both indoors and outdoors;
- Avoid direct external strong light shining on the lens, which may cause the lens to focus and burn out internal components.

- Lighting fixtures should be kept clean and avoid prolonged use in overheated or dusty environments to prevent contact with chemical liquids;
- When using the product, attention should be paid to avoiding serious or fatal injuries caused by fire, heat, electrical shock, and ultraviolet radiation. Before powering on or installing, read the instruction manual first. Follow the safety precautions for operation and pay attention to the warning signs on the instructions and equipment;
- Only professionals are allowed to install, operate, and maintain lighting fixtures, and strictly follow the procedures stated in the operating instructions.

- The eyes cannot directly look at the luminous object;
- Do not connect this device to any dimmer;
- If visible damage occurs to the protective casing, lens, and display screen on the lighting fixture, it is considered as damage to the point of loss;
- Please do not place any filters or other items at the light outlet, and do not replace non original parts;
- The minimum safe illumination distance of the lamp is 5m.

- Before installation, please confirm that the power supply voltage used matches the voltage indicated on the light fixture. Each lighting fixture should be properly grounded and electrically installed according to relevant standards;
- Please disconnect the power before repairing or cleaning the equipment;
- During the operation of the lighting fixtures, touching the wires is prohibited to prevent electric shock;
- If the external soft cable or wire of this lamp is damaged, the wire should be replaced by the manufacturer, its agent, or a similarly qualified person to avoid danger;
- Avoid flammable liquids, water, or metal conductors from entering the interior of the lamp to prevent electric shock or fire. If any foreign objects enter the lamp, immediately cut off the power supply;
- When multiple lamps are operated in series, the signal lines can be connected in multiple ways, but the power supply must be connected separately.

- The lighting fixtures work normally at -40 °C to 45 °C . When replacing any components or accessories in the equipment, ensure that the power is disconnected to prevent electric shock and injury;
- The maximum surface temperature of the lamp during operation can reach 80 °C , please do not touch it with bare hands.

- The lighting fixtures must be installed in a sufficiently ventilated area, at least 0.5m away from adjacent surfaces, to ensure that no ventilation holes are blocked;
- Do not install the lighting fixtures directly on flammable objects;
- The minimum distance between all outer surfaces of the lamp and combustible materials is 0.5m.

2. Product Introduction

2.1 Exterior dimensions of lighting fixtures

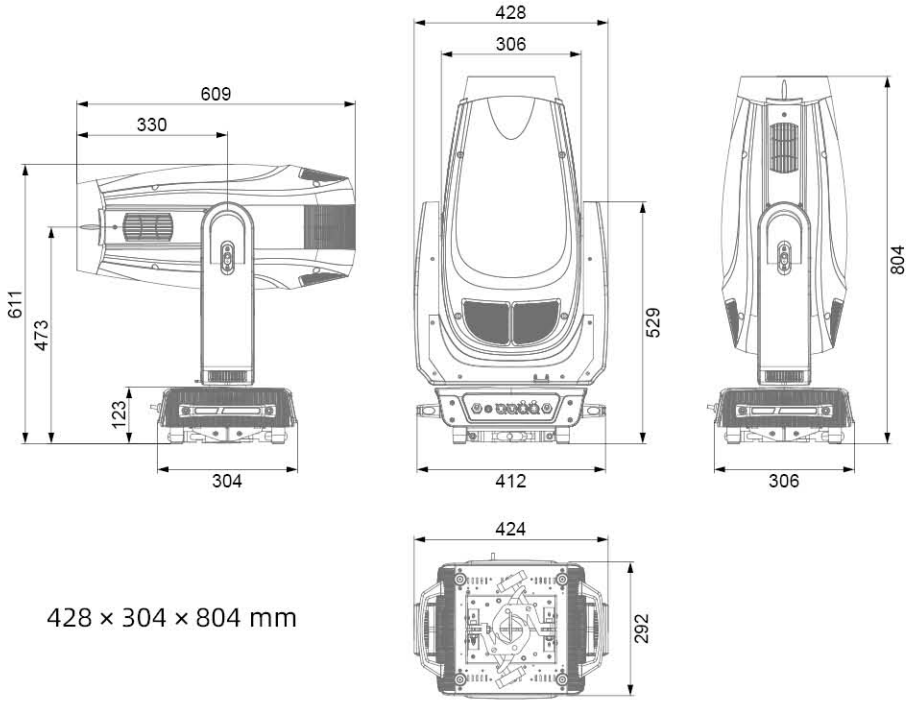

428 × 304 × 804 mm

2.2 Packaging accessories

Name	QTY	
Safety cable	1	PCS



3. Main technical parameters of the equipment

Product execution standards：GB43472-2023、GB/T7000.1-2023、GB/T7000.217-2023

● Electrical parameter

Rated input voltage：AC 100V-240V~ 50Hz/60Hz
Power：1090W@220V; 1181W@100V
Power factor：0.99@220V
Input Current：5.45A@220V

● Source lifespan

>20000 hours

● Color system

CCT: 6500K
CRI: 72 / 95 （Freedom to switch）
Color wheel: 6+1
Linear CMY
Linear CTO（2400~6500K）

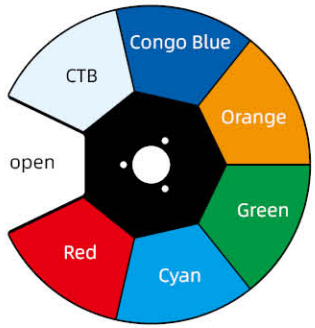

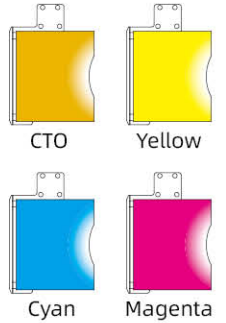

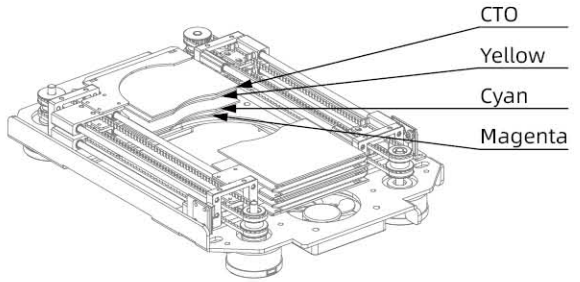

● Gobo system

Rotation Gobo：6+1
Gobo outer diameter：30mm
nternal diameter：25mm

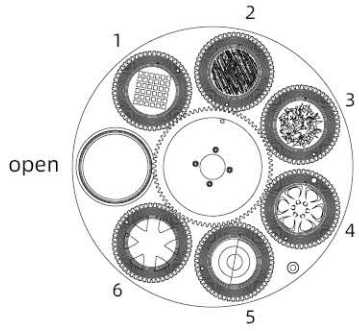



Fixed gobo：7+1

Gobo outer diameter：30mm

nternal diameter：25mm

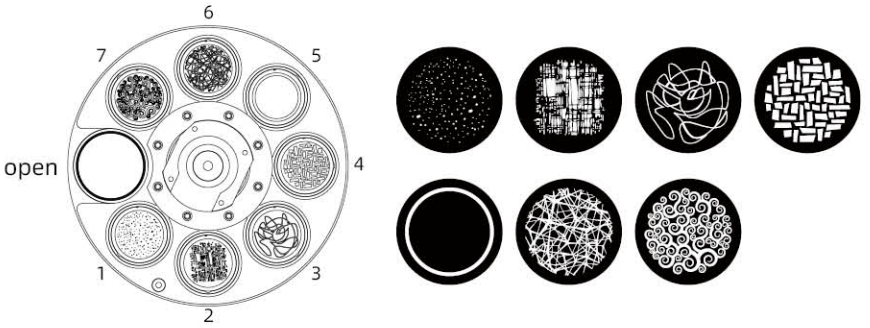

Gobo replace

1、 Fixed gobo wheel

a). Disconnect the power and signal cables from point **A**. Use a screwdriver to remove the two screws at point **B**. Then unscrew the captive screw at point **C** to remove the assembly.

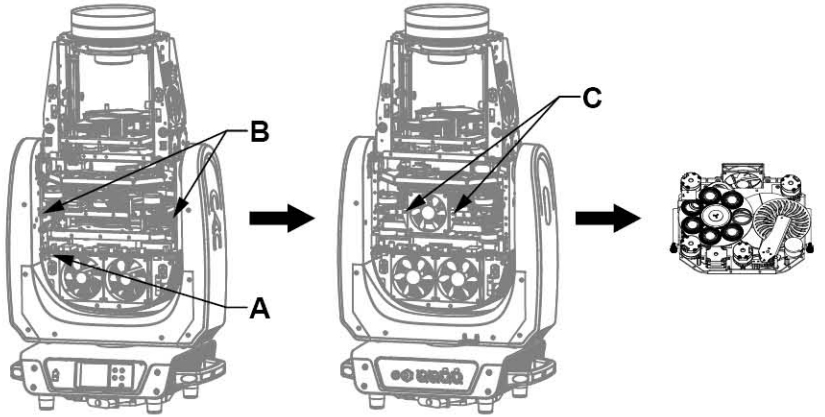

b). Unscrew the 2 screws on the front **D** of the gobo wheel component and remove the magnetic sensing plate; Loosen the 3 screws at point **E** and loosen the Gobo self rotating belt (to facilitate the next step of removing the Gobo wheel component);

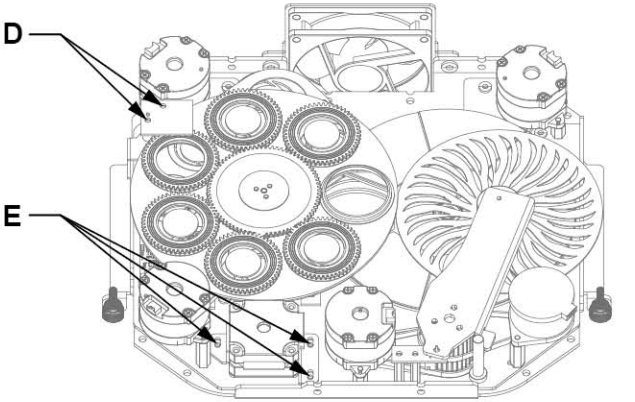

c).Reverse the components and loosen the 4 screws at **F** to loosen the belt; Unscrew the 4 screws at position **G** again to remove the gobo wheel component of the pattern disk;

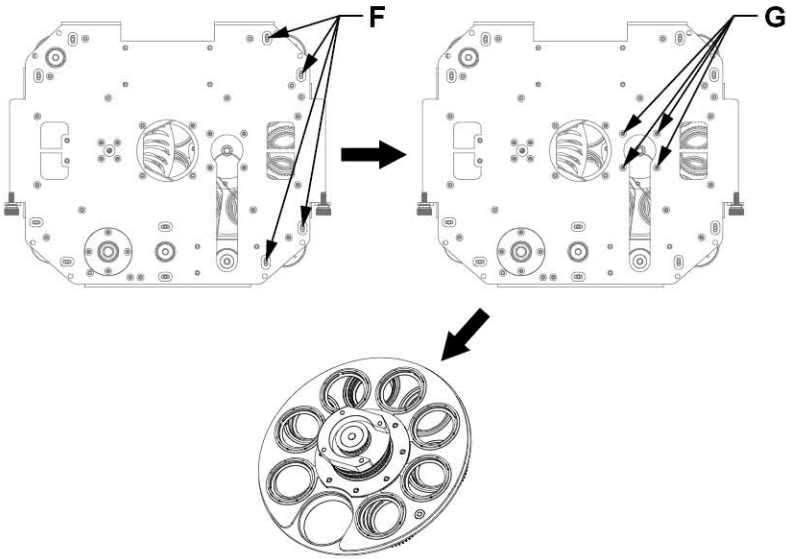

e).As shown in **H**, gently lift the gobo holder from the edge of the fixed gobo wheel and slowly pull it out to remove a single gobo holder;

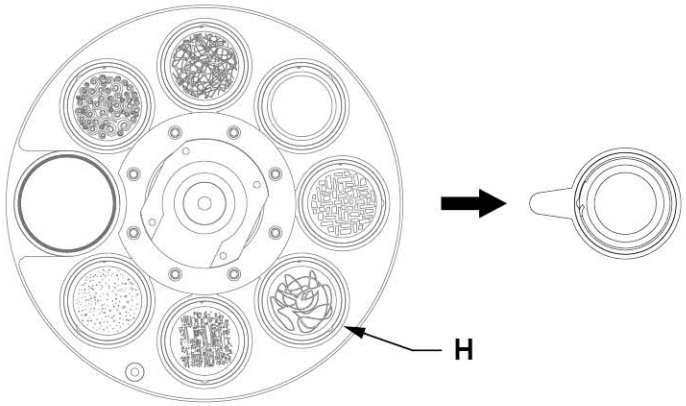

f). Use tweezers or other small grippers to remove the snap spring at point **I** (If the pattern piece is coated with glass glue for fixation, please use a professional cleaning agent to remove the glass glue before removing the snap spring to avoid damaging the gobo);

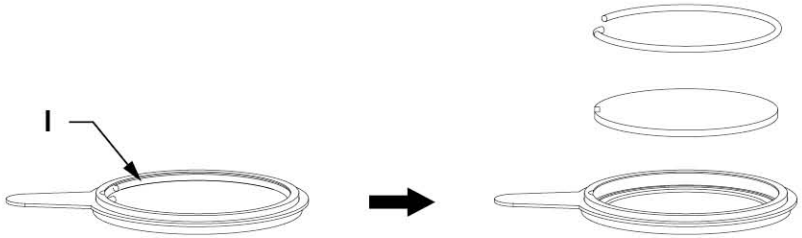

g). When assembling the gobo, avoid touching it directly with your hands. As shown in **J**, align the notch of the gobo with the recess of the driven wheel component (the coating surface of the gobo should face the light source);

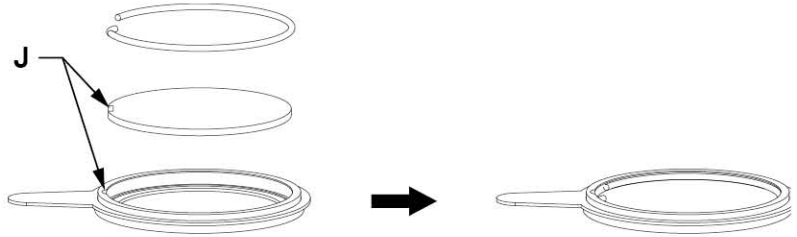

h). Insert the gobo holder into the drive wheel assembly, as shown in **K**,

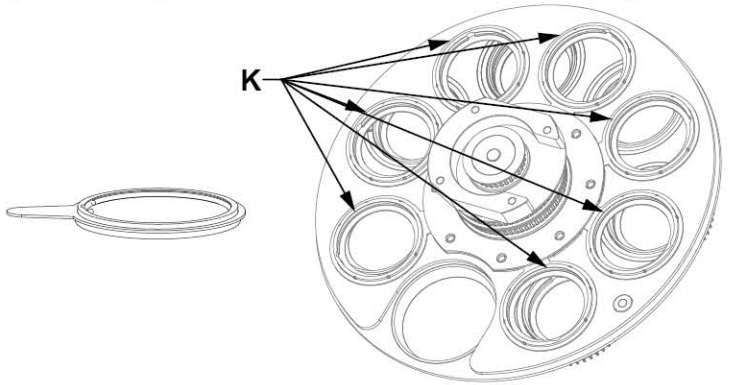

i).After installation, simply reinstall the gobo wheel component onto the light fixture.

2、Rotation gobo wheel

a).After removing the gobo assembly from the fixture, you can proceed to disassemble the gobo holder to replace the gobo,As shown in **A**, gently lift the driven wheel from the edge upwards from the front of the pattern plate and slowly pull it out to remove a single pattern seat;

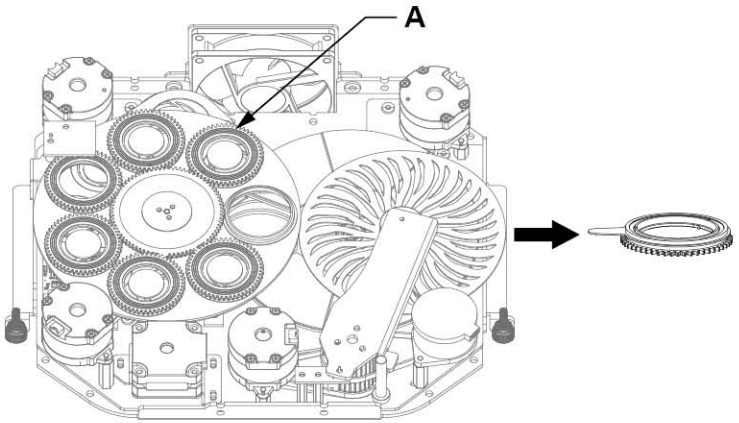

b). Use tweezers or other small grippers to remove the snap spring at point **B** (If the pattern piece is coated with glass glue for fixation, please use a professional cleaning agent to remove the glass glue before removing the snap spring to avoid damaging the gobo);

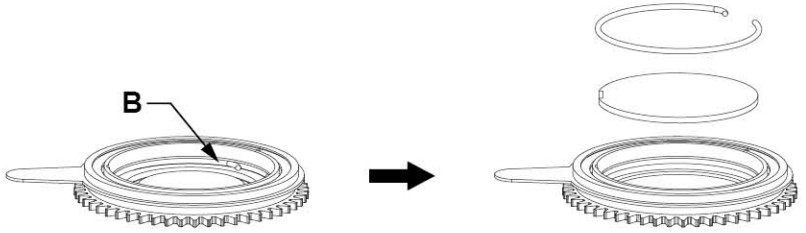

c). When assembling the gobo, avoid touching it directly with your hands. As shown in **C**, align the notch of the gobo with the recess of the driven wheel component (the coating surface of the gobo should face the light source);

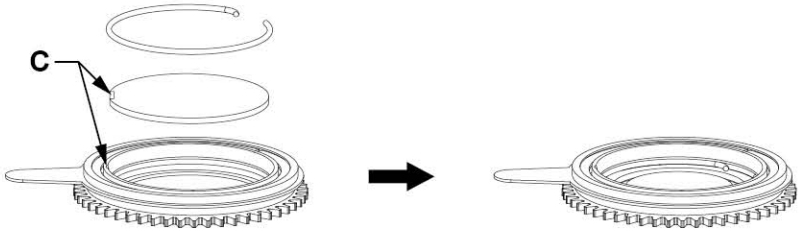

d). Insert the gobo wheel into the drive wheel assembly, as shown in **D**, and reinstall the gobo holder in the order it was removed, After installation, simply reinstall the gobo wheel component onto the light fixture.

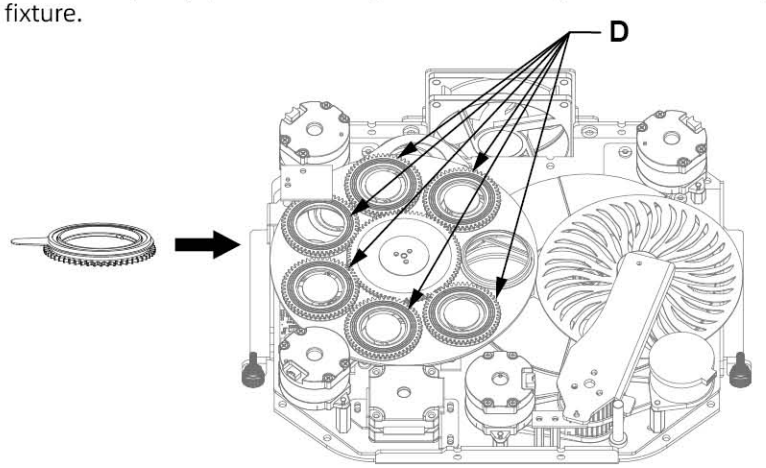

- **Framing system**

  4 gratings achieve fast and smooth cutting, and the cutting direction and angle of each grating can be controlled separately. The single grating can achieve complete light closure, and the entire frame module can rotate ±60°

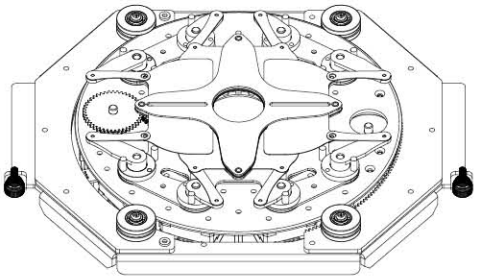

- **Animation**

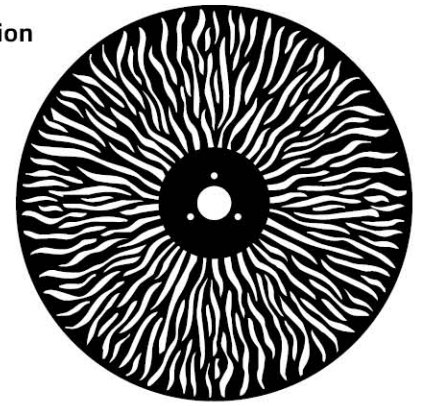

- **Prism system**

  4 prism+6 linear

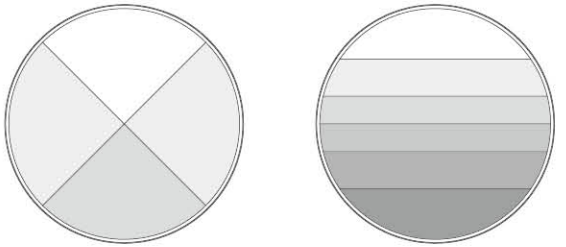

- **Pan/Tilt**

Pan scan:
540° or 630° 8-bit/16bit recision scanning
Tilt scan:
270° 8-bit/16bit precision scanning

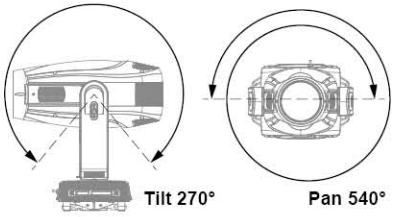

● **Optical system**

Beam angle: 6 ~ 52°
Source: 1000W CW LED
High Brightness Mode: 39000 Lm
High CRI Mode: 26000 Lm

● **Illumination draw**

High brightness

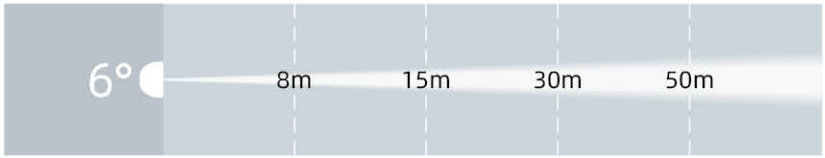

Lux	27400	7843	1960	704
Diameter(m)	0.84	1.57	3.14	5.24

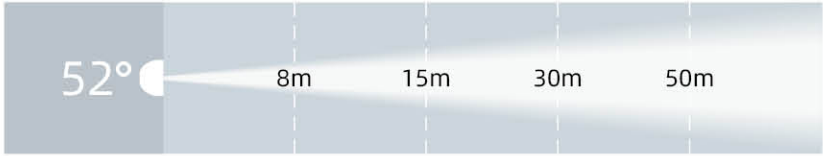

Lux	1210	343	85	30
Diameter(m)	7.80	14.63	29.26	48.77

High CRI

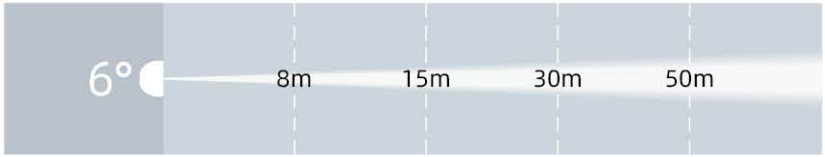

Lux	20100	5753	1438	516
Diameter(m)	0.84	1.57	3.14	5.24

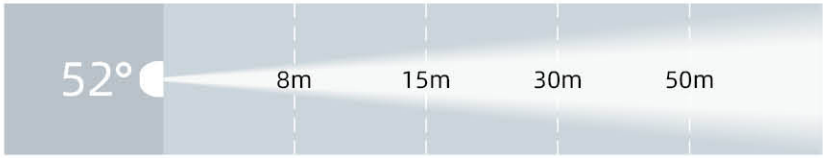

Lux	913	259	64	23
Diameter(m)	7.80	14.63	29.26	48.77

● **Other effect function**

Fast electronic strobe: 1~25Hz
LED refresh rate: 1200Hz-25KHz
Frost: Light frost+heavy frost
Iris

● **Other features and functions**

Control channel: 36/52 CH
Weight: 41 KG

4. Packaging and transportation

4.1 Disassemble packaging

Notice: After receiving the fixture, please unpack and check for any damage caused by transportation. If there is any damage caused by transportation, please do not use this fixture and contact the local technical personnel or manufacturer as soon as possible.

4.2 Equipment packaging

1). Disconnect the power supply before packaging the lighting fixtures to allow them to cool completely;
2). Flight cases can only be stacked in two layers and are not allowed to be reversed.

5. Installation Requirements Explanation

5.1 Clamp install

The lighting fixtures can be installed on the stage or on any direction of the truss, and the clamp can be quickly and easily locked onto the truss.

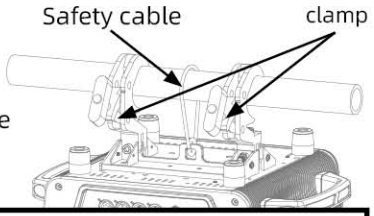

Warning!

The fixture uses an integrated clamp. To use it, lift the clamp up and then rotate it 180° to lock onto the truss. Additionally, a separate safety cable must be connected to the hole on the base. Note: Do not connect the safety cable to the carrying handle.

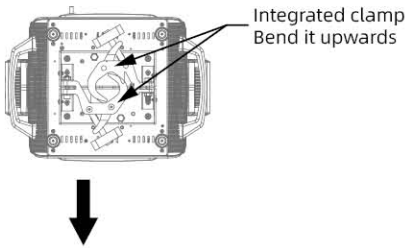

Integrated clamp installion

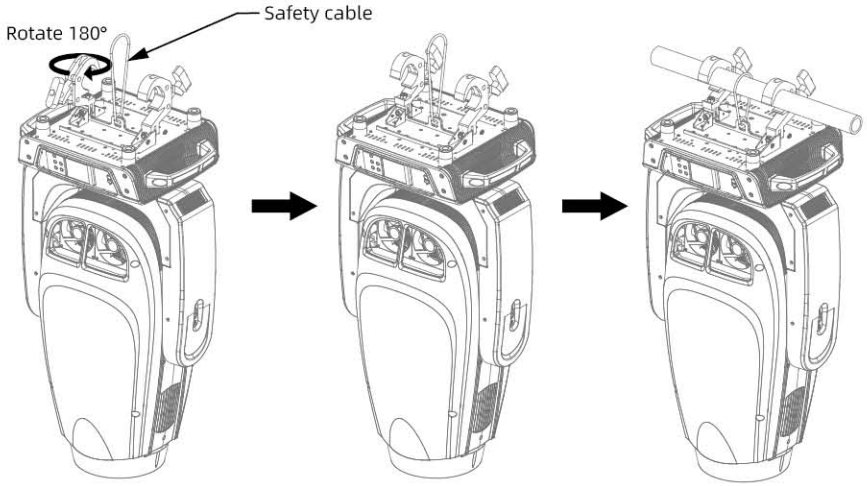

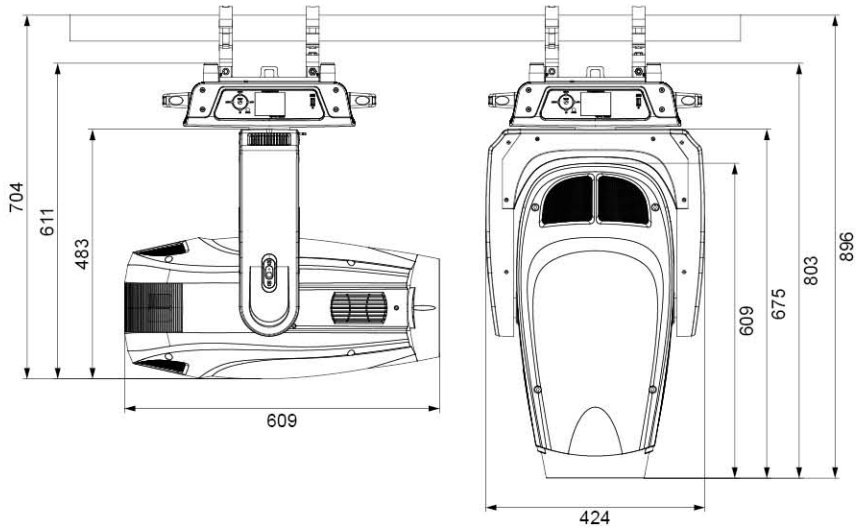

5.2 Equipment installation

1). Before installation, it is necessary to verify that the lamp hook and safety rope are not damaged, and that the installation object can withstand 6 times the total weight of the lamp and cable accessories;

2). The fixture uses an integrated clamp fixed to the base. Pull the clamp outward; one of the clamps is rotatable. Rotate it clockwise by 180° to align it with the other clamp. (The actual shape of the clamps shall prevail.)

5.3 Hanging Installation Diagram

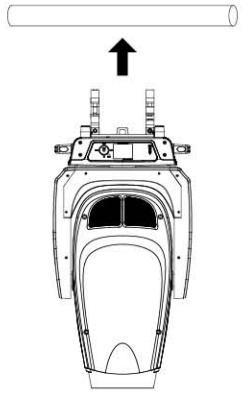

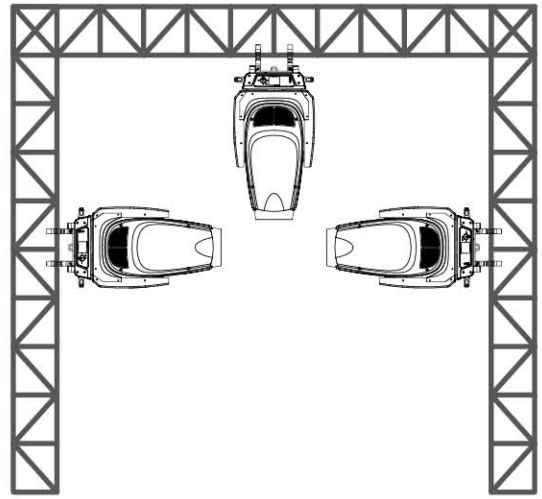

6. Power、Signal connect

6.1 Power and signal socket

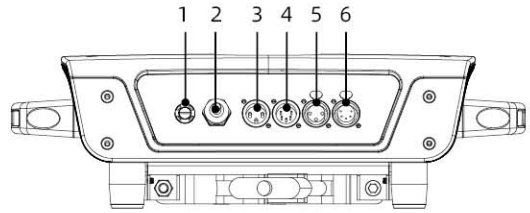

1.Fuse holder
2.Power IN
3.DMX IN
4.DMX IN
5.DMX OUT
6.DMX OUT

6.2 Power connect

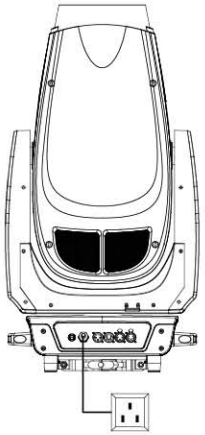

Connection method:

L(live wire) - brown wire

E(Ground wire) - yellow/green dual color line

N(Zero Line) - Blue Line

When connecting the power supply, please note that the voltage and frequency of the power supply must match the voltage and frequency marked on the light fixture. When multiple fixtures are used simultaneously, it is recommended to connect the power supply of each fixture separately, so that each fixture can be individually controlled for power on/off.

Attention: When connecting the power supply, the ground wire (yellow/green dual color wire) must be safely grounded and comply with all relevant electrical installation standards.



Power In

This product uses Powercon In/Out to connect power cords. Due to power limitations, a 2 square 240V power cord can carry up to 1 products.

Waining !

- Do not connect too many fixtures or overload a single power cord;
- Do not use power cords with damaged insulation layers, and do not place power cords on other wires;
- When the fixture is not in use or cleaned, please unplug the power cord; Do not forcefully unplug or drag the power cord directly.

6.3 Signal connect

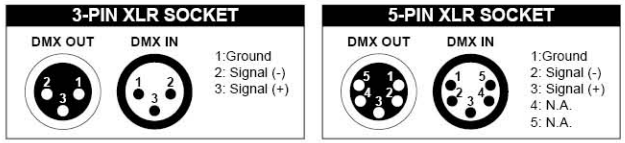

The lighting fixtures are equipped with standard DMX XLR input and output sockets. Please use DMX512 shielded twisted pair signal cables or Category 5 or above network twisted pair cables for connection. The typical connection distance for DMX signal lines is 150 meters. When transmitting signals over long distances, a DMX512 signal amplifier must be added.

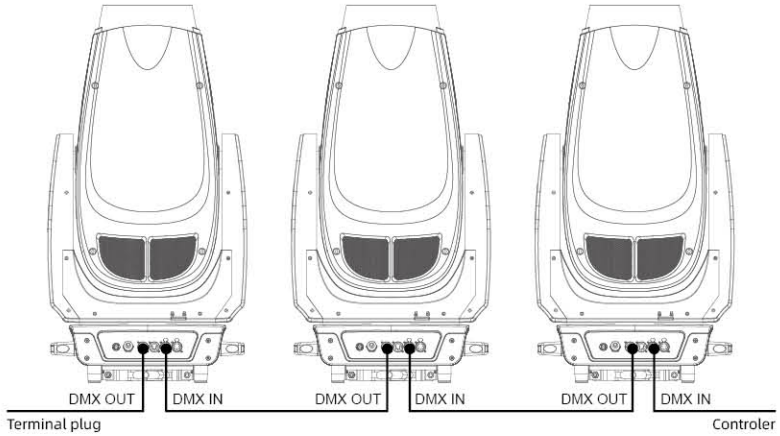

Connect a shielded twisted pair signal cable from the DMX output port of the controller to the DMX input port of the first device, and from the DMX output port of the first device to the DMX input port of the second device, and so on, until all the lamps are connected. Then install a terminal plug on the last 3 pin socket of each connected lamp output. (Weld a 4/1W, 120 Ω resistor between the 2 and 3 pins of a 3 or 5 core pin XLR plug).

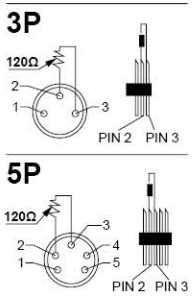

7. Control panel

7.1 Panel Introduction



- Adopting a 2.8 "LCD display screen, the operation panel is equipped with a rechargeable battery, which can enter the menu to set address codes and make other settings without powering on;
- Press the MODE key to view or modify the lighting function settings, and press the UP, DOWN, LEFT, and RIGHT keys to select the function menu;
- Press the ENTER key to confirm your selected function menu, which will take you to the corresponding sub menu in the menu. Each menu item represents a specific function of the lighting fixture (as shown in the table below);
- Press the ENTER key to save your modifications or enter a submenu, and press the UP or DOWN key to modify values (increase or decrease values); Press the MODE key to return to the previous menu or exit.
- Press the MODE key to return to the previous menu or exit.

7.2、System menu

Note: The gray color block is the default setting value

	Software Update Please Wait... CKC Fixture Type Check P10+ Motor Reset		
SET	Dmx Presets	A001~AXXX	
	User Mode	Standard-36CH Extend-52CH	
Fun-ction	Status	No DMX Mode P.Reverse T.Reverse Pan Degree Feedback Move.Speed Hibernation	Black/Hold/Auto ON/OFF ON/OFF 630/540 ON/OFF Speed 1~ 4 OFF, 01M~99M, 15M
	Dim Mode	Standard Stage TV Architectural Theatre	
	Temp. C/F	Celsius Fahrenheit	
	Dim Curve	Linear Square Inv-Square S-Curve	
	Frequency	1200Hz/3600Hz/5000Hz/10KHz/15KHz/20KHz/25KHz	
	CRI Mode	Standard High CRI	
	CTO Mode	6500K 6000K 3000K	
	Fan Set	Head Fan	Auto High Low
		Base Fan	Auto High
	LCD.Set	Backlight Flip Display Key Lock DispFlash Language	01~60m OFF/ON OFF/ON OFF/ON English/Chinese
	Disp.Set	Channel Value Slave Set Auto.Prog	PAN..... Slave1,Slave2,Slave3 Master / Alone
	DFSE	OFF/ON	
	USB Update	OFF/ON	
Test	Reset.M	All Pan&Tilt Other	
	Test.Chan	PAN	
	Panel.Ctrl.	PAN =XXX :	
	Calibrate	-Password- PAN :	
Infor-mation	Time.Info	Current Total Time Last Time Timer PIN Clear Last	
	Temp. Info	Base Temp. Head Temp.	
	Fan Speed	Base Fan1:xxxx RPM Base Fan2: xxxx RPM Cool Fan1: xxxx RPM	
	Error. Info	Pan,Tilt.....	
	Model. Info	P10+	
	Software.V	1U V1.X.X 2U V1.X.X 3U V1.X.X :	

8. DMX channel table:

ST.	EX.	Function	Values
1	1	Pan	000 - 255 Pan Movement (540/630)
2	2	Pan fine	000 - 255 Pan Fine
3	3	Tilt	000 - 255 Tilt Movement (270)
4	4	Tilt fine	000 - 255 Tilt Fine
5	5	Dimmer	000 - 255 Intensity 0 to 100%
6	6	Dimmer fine	000 - 255 Dimmer Intensity Fine
7	7	Strobe functions	**Shutter, Strobe:**
			000 - 031 Shutter closed
			032 - 063 Shutter open
			064 - 095 Strobe slow to fast
			096 - 127 Shutter open
			128 - 159 Pulse effect slow to fast
			160 - 191 Shutter open
			192 - 223 Random strobe slow to fast
			224 - 255 Shutter open
8	8	Cyan	000 - 255 0% to 100%
	9	Cyan Fine	000 - 255 0% to 100%
9	10	Magenta	000 - 255 0% to 100%
	11	Magenta Fine	000 - 255 0% to 100%
10	12	Yellow	000 - 255 0% to 100%
	13	Yellow Fine	000 - 255 0% to 100%
11	14	CTO	000 - 255 0% to 100%
	15	CTO Fine	000 - 255 0% to 100%
12	16	Colour Wheel	**Color Wheel :**
			000 - 005 Color off (Open)
			006 - 115 Open → Color1..Color6 → Open
			116 - 120 Open
			121 - 130 Deep red
			131 - 140 Medium blue
			141 - 150 Deep green
			151 - 160 Amber
			161 - 170 Congo blue
			171 - 180 Ctb
			181 - 192 Color off (Open)
			193 - 223 Color wheel rot. Slow ->Fast, cw
			224 - 224 Color wheel rot. Stop
			225 - 255 Color wheel rot. Fast -> Slow, ccw
13	17	Colour Wheel Fine	000 - 255 0% to 100%
14	18	Gobo Wheel 1	**Rotanting Gobos:**
			000 - 005 Open
			006 - 020 Gobo 1
			021 - 035 Gobo 2
			036 - 050 Gobo 3
			051 - 065 Gobo 4
			066 - 080 Gobo 5
			081 - 095 Gobo 6
			096 - 110 Gobo 1 shake (Slow-Fast)
			111 - 125 Gobo 2 shake (Slow-Fast)
			126 - 140 Gobo 3 shake (Slow-Fast)
			141 - 155 Gobo 4 shake (Slow-Fast)
			156 - 170 Gobo 5 shake (Slow-Fast)
			171 - 185 Gobo 6 shake (Slow-Fast)
			186 - 192 Open
			193 - 223 Gobo Wheel rot. Slow -> Fast, CW
			224 - 224 Gobo Wheel rot. Stop
			225 - 255 Gobo Wheel rot. Fast -> Slow, CCW

15	19	Gobo 1 Rotation	**Rotanting Gobo Index:**
			000 - 005 Gobo1 Rot. Off
			006 - 128 Gobo Position 0° ... 540°
			129 - 191 Gobo Rotation, Slow -> Fast, CW
			192 - 192 Gobo Rotaion Stop
			193 - 255 Gobo Rotation, Fast -> Slow, CCW
16	20	Gobo 1 Rotation fine	000 - 255 Gobo indexing fine
17	21	Gobo Wheel 2	**Fixed Gobo:**
			000 - 005 Open
			006 - 018 Gobo 1
			019 - 031 Gobo 2
			032 - 044 Gobo 3
			045 - 057 Gobo 4
			058 - 070 Gobo 5
			071 - 083 Gobo 6
			084 - 096 Gobo 7
			097 - 109 Gobo 1 shake (Slow-Fast)
			110 - 122 Gobo 2 shake (Slow-Fast)
			123 - 135 Gobo 3 shake (Slow-Fast)
			136 - 148 Gobo 4 shake (Slow-Fast)
			149 - 161 Gobo 5 shake (Slow-Fast)
			162 - 174 Gobo 6 shake (Slow-Fast)
			175 - 187 Gobo 7 shake (Slow-Fast)
			188 - 192 Open
			193 - 223 Gobo Wheel rot. Slow -> Fast, CW
			224 - 224 Gobo Wheel rot. Stop
			225 - 255 Gobo Wheel rot. Fast -> Slow, CCW

18	22	Zoom	000 - 255 Narrow to wide
	23	Zoom fine	000 - 255 Narrow to wide
19	24	Focus	000 - 255 0% to 100%
	25	Focus fine	000 - 255 0% to 100%
20	26	Iris	**Iris:**
			000 - 225 Open - Close
			226 - 235 Pulse up, Slow -> Fast
			236 - 245 Pulse dowm, Slow -> Fast
			246 - 255 Random effect, Slow -> Fast
21	27	Prism Wheel	**Prism Wheel:**
			000 - 005 No Prism
			006 - 130 Prism 1 (6 Liner prism)
			131 - 255 Prism 2 (4 Facet prism)
22	28	Prism rotation	**Prism rotation:**
			000 - 005 Prism Rot. Off
			006 - 128 Prism Position 0 ... 540°
			129 - 191 Prism Rotation, Slow -> Fast, CW
			192 - 192 Prism Rotation Stop
			193 - 255 Prism Rotation, Fast -> Slow, CCW
23	29	Frost1	000 - 255 0% to 100%
24	30	Frost2	000 - 255 0% to 100%
25	31	Effect Wheel	**Animation1:**
			000 - 005 Wheel Rot. Off
			006 - 128 Wheel Position 0 ... 540°
			129 - 191 Wheel rot. Slow -> Fast, CW
			192 - 192 Wheel rot. Stop
			193 - 255 Wheel rot. Fast -> Slow, CCW
26	32	Blade 1A	000 - 255 0% to 100%
	33	Blade 1A fine	000 - 255 0% to 100%

27	34	Blade 1B	000 - 255 0% to 100%
	35	Blade 1B fine	000 - 255 0% to 100%
28	36	Blade 2A	000 - 255 0% to 100%
	37	Blade 2A fine	000 - 255 0% to 100%
29	38	Blade 2B	000 - 255 0% to 100%
	39	Blade 2B fine	000 - 255 0% to 100%
30	40	Blade 3A	000 - 255 0% to 100%
	41	Blade 3A fine	000 - 255 0% to 100%
31	42	Blade 3B	000 - 255 0% to 100%
	43	Blade 3B fine	000 - 255 0% to 100%
32	44	Blade 4A	000 - 255 0% to 100%
	45	Blade 4A fine	000 - 255 0% to 100%
33	46	Blade 4B	000 - 255 0% to 100%
	47	Blade 4B fine	000 - 255 0% to 100%
34	48	Shape Rotation	000 - 255 Rotation from 0 to 120°
	49	Shape Rotation Fine	000 - 255 0% to 100%
	50	Pan/Tilt Speed	000 - 255 Pan/Tilt Fast -> Slow
35	51	Set dimmer Mode	**Dimmer Mode:**
			000 - 020 Standard
			021 - 040 Stage
			041 - 060 TV
			061 - 080 Architectural
			081 - 100 Theater
			101 - 255 Default to unit setting
36	52	Device settings	**Device settings:**
			000 - 005 No function
			006 - 010 On Display Backlight
			011 - 015 OFF Display Backlight
			016 - 020 Invert Pan on (Hold 3s)
			021 - 025 Invert Pan off (Hold 5s)
			026 - 030 Invert Tilt on (Hold 3s)
			031 - 035 Invert Tilt off (Hold 5s)
			036 - 040 Fan Auto (Hold 3s)
			041 - 045 Fan Silent (Hold 3s)
			046 - 050 Fan high (Hold 3s)
			051 - 055 Linear Dimmer Curve (Hold 3s)
			056 - 060 Square Dimmer Curve (Hold 3s)
			061 - 065 Inv-Square Dimmer Curve (Hold 3s)
			066 - 070 S- Dimmer Curve (Hold 3s)
			071 - 075 Led Freq. 1200 Hz (Hold 3s)
			076 - 080 Led Freq. 3600 Hz (Hold 3s)
			081 - 085 Led Freq. 5000 Hz (Hold 3s)
			086 - 090 Led Freq. 10.000 Hz (Hold 3s)
			091 - 095 Led Freq. 15.000 Hz (Hold 3s)
			096 - 100 Led Freq. 20.000 Hz (Hold 3s)
			101 - 105 Led Freq. 25.000 Hz (Hold 3s)
			106 - 110 Reset Pan/Tilt (Hold 3s)
			111 - 115 Reset only Head (Hold 3s)
			116 - 120 Reset All Functions (Hold 3s)
			121 - 125 Standard Mode
			126 - 130 High CRI
			131 - 135 6500K (Default)
			136 - 140 6000K
			141 - 145 3000K
			146 - 255 No function

9. Control circuit diagram

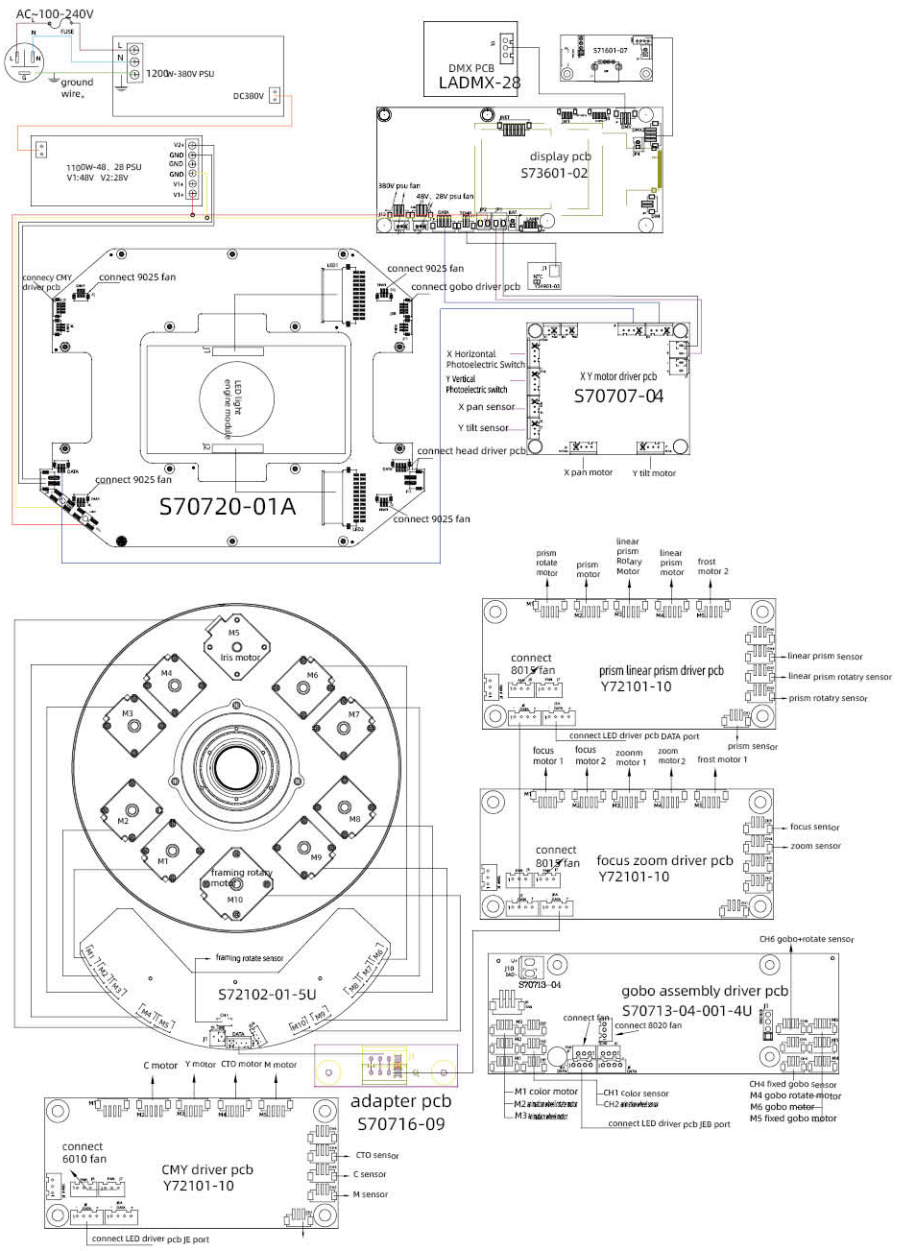

10. Regular maintenance

10.1 Cleaning and maintenance

Lighting fixtures require daily cleaning and maintenance, and their service life largely depends on the operating environment and standards. If you have any questions, please consult our technical engineers for advice. Maintenance and repair work not included in this book should be entrusted to our qualified technical engineers.

Attention! Damage caused by dust, e-liquid, or other reasons, as well as abnormal use, is not covered by the warranty.

Waining !

Before opening any lid, disconnect the power supply. Cleaning optical components requires gentle wiping as the coating surface is prone to scratching. Do not use damaging liquids or hard objects , as they may damage the plastic or coating surface.

- When the lens is cracked or otherwise damaged, it should be replaced in a timely manner;
- When the brightness significantly decreases, the LED may have reached its expiration date and should be replaced in a timely manner;
- When the fixture cannot start, please check if the fixture power fuse is blown. If it is blown, a fuse of the same specification must be used for installation;
- The fixture is equipped with a temperature protection device. When the temperature is too high, the protection device will automatically reduce power.
- When this situation occurs, please check whether the fan is running normally, whether the fan and fan mesh are clogged with dust, identify the fault and repair it before starting the fixture. Please note that only qualified technicians are allowed to carry out maintenance work;
- To maintain smooth movement of the focusing lens, it is recommended to lubricate the guide rail of the focusing lens every three months. Excellent and high-temperature resistant lubricating grease should be used, and excessive grease should not be used as it can easily dirty adjacent components.

10.2 Fault analysis and handling

Fault description	Analysis	Processing method
No action after power on	Check if the power switch is turned on	Turn on
	Check if the fuse is blown	Replace
	Check if the output of PSU is normal	Detecting voltage
	Check if poor contact in the internal circuit	Reconnect

Uncontrolled lighting fixtures	Check if the DMX signal cable is connected correctly (If there is no signal, the display screen will flash)	Reconnect or replace
	Check if the address code is correct and if the DMX mode of the lighting fixture matches the settings	Reconfirm
	The main control PCB is damaged	Replace
Not bright	LED aging or damage	Replace
	Power PCB malfunction	Check/ Replace
	Loose or poor contact of the circuit	Reconnect
	PSU malfunction	Replace
Automatically turn off or dim the lights	LED aging	Replace
	Damaged cooling fan or abnormal wind speed	Replace
	Check the power output of the fan	Check/ Replace
	The temperature control switch is damaged	Replace
Gobo wheel misalignment or abnormal control	Poor contact of motor wire	Reconnect
	Corresponding motor drive board malfunction	Refixed
	Misalignment or magnetic damage between the magnetic tube and the positioning magnet	Adjust/Replace
	Motor malfunction	Replace
Weak light efficiency and uneven light spot	LED aging	Replace
	LED not centered with the lens	Adjust LED
	The optical mirror has accumulated dust or stains	Clean
	The optical mirror is damaged	Replace
Impure color	Weakening of light efficiency	Replace led PCB
	The color filter has accumulated dust or stains	Clean
	The color filter has been demolded or damaged	Replace
Gobo is unclear	The optical mirror has accumulated dust or stains	Clean
	The optical mirror is damaged	Replace
Head or base fan stops rotating	Check if the fan leads are installed properly or disconnected	Re connect
	Check if the fan is damaged	Replace
	Check if there are any other interfering objects within the operating range of the fan	Adjust

Attention! The above analysis is for abnormal reference only. Non professionals are not allowed to disassemble and repair the machine

