LIGHT IT LIKE IT



Proxima Compact

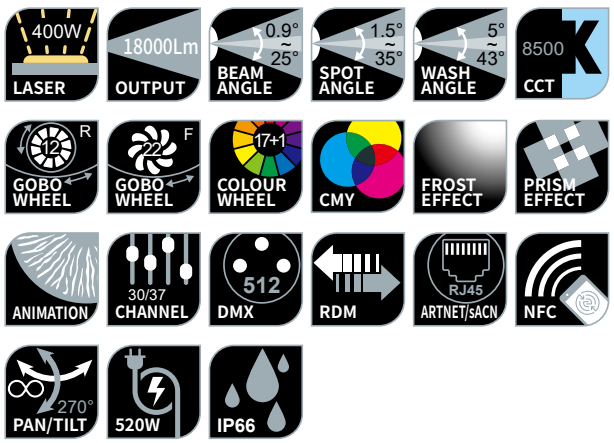

Adopts 400W laser source
Total luminous flux 18,000 lumens
Beam Angle 0.9° ~43° zoom
CCT 8500K
IP66 rating, resistant to harsh environments such as rain, dust, and extreme temperatures, suitable for both indoor and outdoor applications



OPTIC

- Source: 400W laser
- Output: 18000 Lm
- Beam angle: 0.9° ~ 25°
- Spot angle: 1.5° ~ 35°
- Wash angle: 5° ~43°
- CCT: 8500K
- Lux: 1234000 Lux@10m
- Lens diameter: 160mm
- Source lifetime: >20000 H

EFFECT

- Strobe: 1~25Hz
- LED refresh rate：1200Hz-25KHz
- Rotation gobo wheel: 12 + 1
- Rotation gobo size: Outer diameter 11mm/Inner diameter 6mm/Thickness 1.1mm
- Fixed gobo wheel: 22 + 1
- Color wheel: 17 + 1
- CMY
- CTO 2700K ~ 8500K
- Prism: Wheel 1(6 linear) / Wheel 2(8 fact prism + 12 fact prism + 24 fact prism)
- Frost: 1
- Animation

CONTROL & PROGRAM

- Channel: 30CH / 37CH
- Protocal: DMX512, RDM, ArtNet/sACN
- Data connector: 3PIN XLR, RJ45 In/Out
- Display: 2.4 inches screen
- NFC: The lighting fixtures do not require power on and can be directly set up, diagnosed, and perform other functions through the CKC app

SOFTWARE

- Via DMX signal to update
- Static waterproof fan, intelligent speed control
- Intelligent temperature protection to ensure LED service life

PAN & TILT MOVEMENT

- Pan: Infinite rotation (360°)
- Tilt: 270° 8bit/16bit

HOUSING

- Aluminum alloy structure + plastic (VO)
- Fan cooling
- Resistant to salt corrosion

POWER CONSUMPTION

- Rated input voltage: AC 100V~240V 50/60Hz
- Power: 520 W
- Power factor: 0.99

OTHER

- IP rating: IP66
- Work environment: -40°C ~ 45°C
- Startup environment: -20°C ~ 45°C

SIZE & WEIGHT

- Size: 395 × 255 × 655 mm
- N.W.: 26 kgs

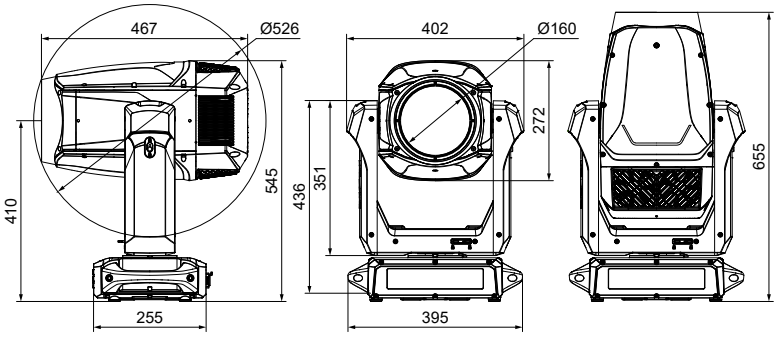



PHOTOMETRICAL DATA

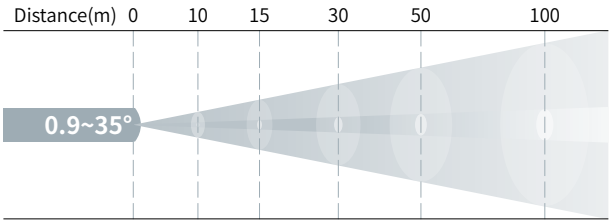

Lux 0.9°	1234000	548444	137111	49360	12340
Diameter(m)	0.16	0.24	0.47	0.79	1.57
Lux 1.5°	963000	428000	107000	38520	9630
Diameter(m)	0.26	0.39	0.79	1.31	2.62
Lux 25°	4050	1800	450	162	
Diameter(m)	4.43	6.65	13.30	22.17	
Lux 35°	4041	1796	449	162	
Diameter(m)	6.31	9.46	18.92	31.53	

ROTATION GOBO

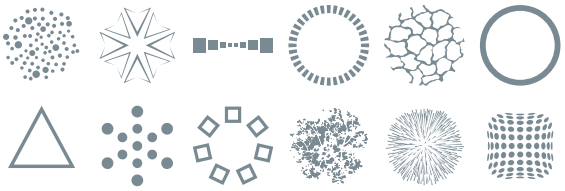

FIXED GOBO



COLOUR

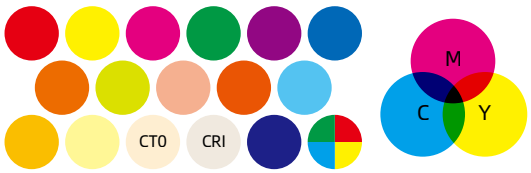

ANIMATION



PRISM



FROST

